Retrouvez cette pièce sur nhp-motoculture.fr en cliquant sur le numéro de référence

# STIGA

## SP 680 (2006)

15-4162-31

# Spare parts list
# Reservdelar
# Repuestos
# Ersatzteile
# Pièces détachées
# Reserve onderdelen
# Catalogo ricambi

NHP Motoculture
Cultivez votre univers

● Use ST. S.p.A.  Genuine Spare Parts specified in the parts list for repair and/or replacement.
● The contents described in the parts list may change due to improvement.
● The drawings of the spare parts are only indicative And might Not represent the part in question exactly.
● The indications "right" - "left" - "front" - "rear" refer to the position of the operator when using the machine.
● When placing orders of parts for repair And/Or replacement, make sure that the illustrated parts list Is the one applying to the machine's year of manufacture, as shown on the identification plate attached to the machine.

All rights reserved. No part Of this material may be reproduced Or transmitted, in any form Or by any means, electronic Or mechanical, including photocopying, recording Or by any information storage And retrieval system, without permision in writing from ST. S.p.A.


Copyright ST. S.P.A.

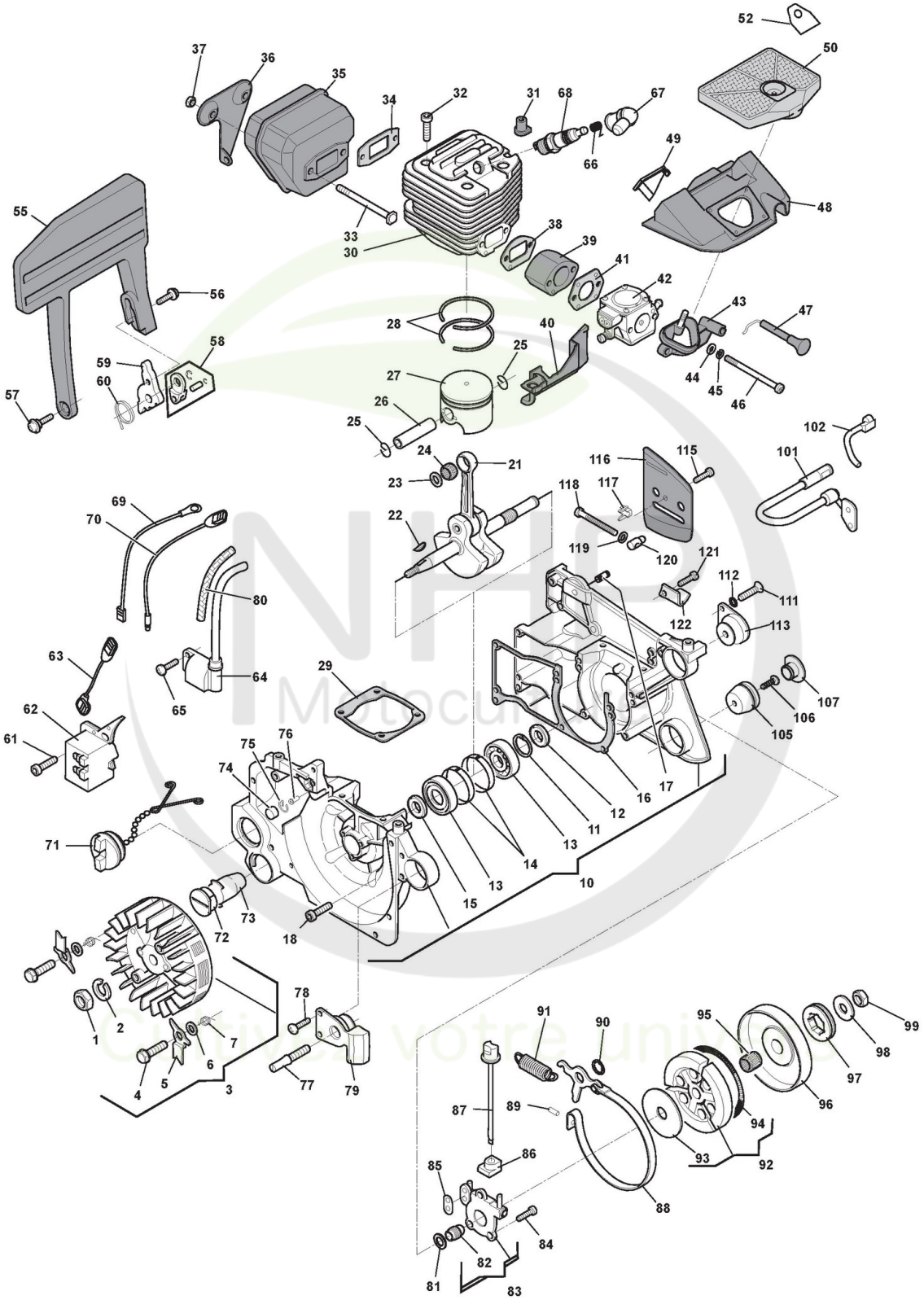



Copyright ST. S.P.A.

# Moteur

| Réf. N° | Q.té : | Code article | Description | Articles | De | Jusqu'à |
|---|---|---|---|---|---|---|
| 1 | 1 | 6995020 | Ecrou | | | |
| 2 | 1 | 6995014 | Rondelle | | | |
| 3 | 1 | 6995056 | Ens. Volant | | | |
| 4 | 2 | 6995075 | Vis | | | |
| 5 | 2 | 6995130 | Fixation Démarreur | | | |
| 6 | 2 | 6995132 | Rondelle | | | |
| 7 | 2 | 6995098 | Ressort | | | |
| 10 | 1 | 6995151 | Carter Moteur | | | |
| 11 | 1 | 6995017 | Anneau Élastique | | | |
| 12 | 1 | 6995165 | Anneau De Tenue | | | |
| 13 | 2 | 6995166 | Coussinet | | | |
| 14 | 2 | 6995029 | Rondelle | | | |
| 15 | 1 | 6995084 | Anneau De Tenue | | | |
| 16 | 1 | 6995139 | Garniture Carter | | | |
| 17 | 2 | 6995028 | Prisonnier Guide | | | |
| 18 | 6 | 6995070 | Vis | | | |
| 21 | 1 | 6995042 | Arbre Moteur | | | |
| 22 | 1 | 6995018 | Languette Volant | | | |
| 23 | 2 | 6995041 | Rondelle | | | |
| 24 | 1 | 6995021 | Roulement | | | |
| 25 | 2 | 6995093 | Circlip Pointeau | | | |
| 26 | 1 | 6995129 | Pointeau Piston | | | |
| 27 | 1 | 6995054 | Piston | | | |
| 28 | 2 | 6995055 | Collier Élastique | | | |
| 29 | 1 | 6995027 | Garniture Cylindre | | | |
| 30 | 1 | 6995136 | Cylindre | | | |
| 31 | 1 | 6995100 | Caoutchouc | | | |
| 32 | 4 | 6995070 | Vis | | | |
| 33 | 2 | 6995103 | Vis | | | |
| 34 | 1 | 6995102 | Garniture Silencieux | | | |
| 35 | 1 | 6995025 | Silencieux | | | |
| 36 | 1 | 6995101 | Deflecteur | | | |
| 37 | 2 | 6995064 | Ecrou | | | |
| 38 | 1 | 6995137 | Joint Collecteur-Cylindre | | | |
| 39 | 1 | 6995053 | Collecteur D'Aspiration | | | |
| 40 | 1 | 6995112 | Convoyeur Air | | | |
| 41 | 1 | 6995138 | Joint Collecteur-Carburateur | | | |
| 42 | 1 | 6995149 | Carburateur | | | |
| 43 | 1 | 6995126 | Collecteur Air | | | |
| 44 | 2 | 123657003/0 cliquez ici | Rondelle | | | |
| 45 | 2 | 6995003 | Rondelle | | | |
| 46 | 2 | 6995001 | Vis | | | |
| 47 | 1 | 6995051 | Levier Air | | | |
| 48 | 1 | 6995150 | Support Filtre À Air | | | |
| 49 | 1 | 6995026 | Bouchon | | | |
| 50 | 1 | 6995146 | Filtre À Air | | | |
| 52 | 1 | 6995145 | Plaquette | | | |
| 55 | 1 | 6995148 | Ens. Protège-Main | | | |


Copyright ST. S.P.A.

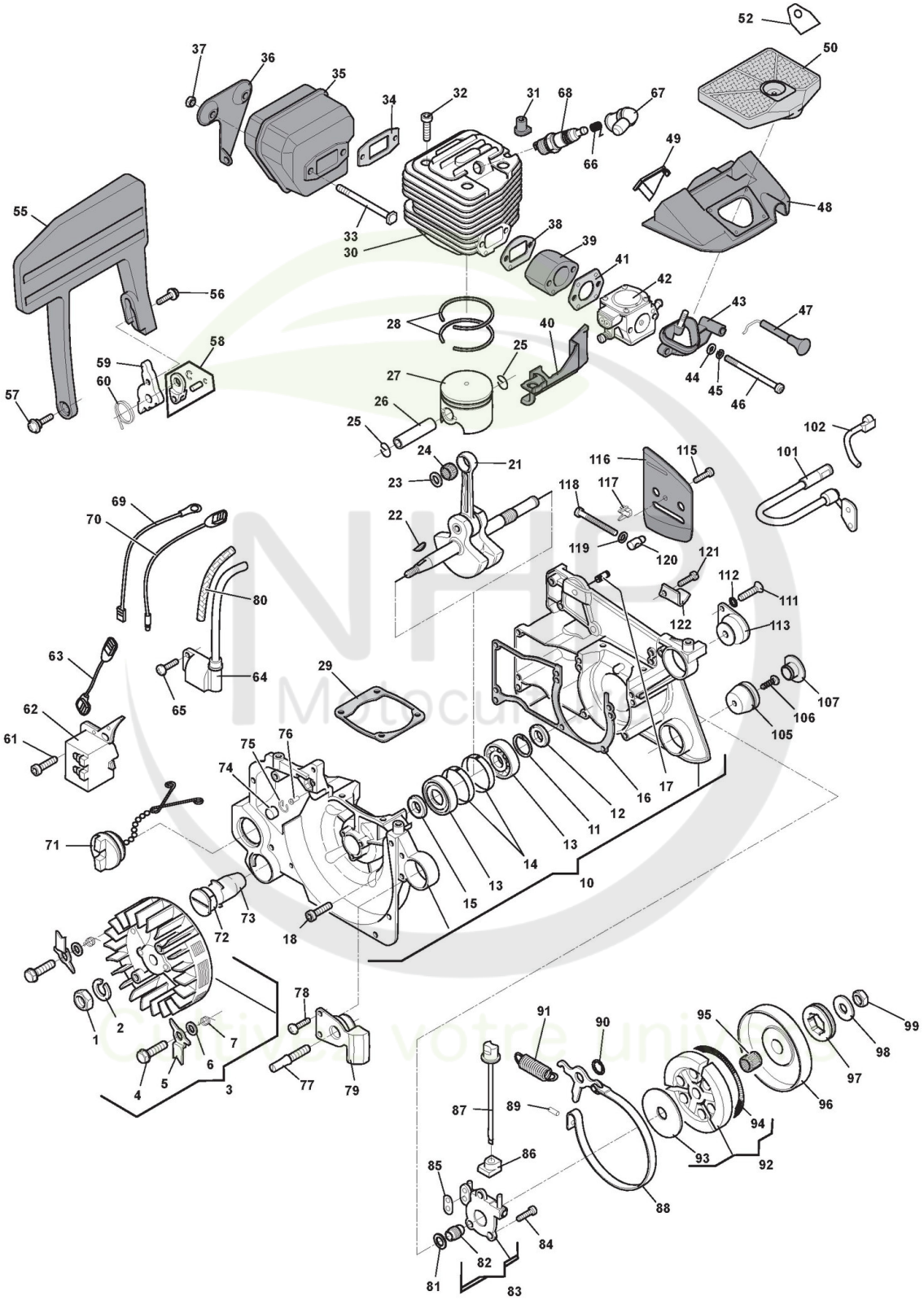



Copyright ST. S.P.A.

| Réf. N° | Q.té : | Code article | Description | Articles | De | Jusqu'à |
|---|---|---|---|---|---|---|
| 56 | 1 | 6995062 | Vis | | | |
| 57 | 1 | 6995142 | Vis | | | |
| 58 | 1 | 6995147 | Butée | | | |
| 59 | 1 | 6995058 | Levier | | | |
| 60 | 1 | 6995108 | Ressort | | | |
| 61 | 2 | 6995083 | Vis | | | |
| 62 | 1 | 6995141 | Aimant | | | |
| 63 | 1 | 6995046 | Cable | | | |
| 64 | 1 | 6995045 | Bobine Électronique | | | |
| 65 | 2 | 6995008 | Vis | | | |
| 66 | 1 | 6995022 | Borne Fil Bougie | | | |
| 67 | 1 | 6995066 | Capuchon Bougie | | | |
| 68 | 1 | 3210024 | Bougie | | | |
| 69 | 1 | 6995047 | Câble Bobine-Interrupt. | | | |
| 70 | 1 | 6995048 | Câble Masse | | | |
| 71 | 1 | 6995109 | Bouchon Huile | | | |
| 72 | 2 | 6995155 | Bouchon | | | |
| 73 | 2 | 6995036 | Caoutchouc Anti-Vibrations | | | |
| 74 | 1 | 6995087 | Vanne | | | |
| 75 | 1 | 6995088 | Butée | | | |
| 76 | 1 | 6995081 | Vanne | | | |
| 77 | 2 | 6995040 | Pivot | | | |
| 78 | 2 | 6995031 | Vis | | | |
| 79 | 1 | 6995037 | Caoutchouc Anti-Vibrations | | | |
| 80 | 1 | 6995065 | Gaine Câbles | | | |
| 81 | 2 | 6995019 | Rondelle | | | |
| 82 | 1 | 6995119 | Vis | | | |
| 83 | 1 | 6995140 | Ens. Pompe À Huile | | | |
| 84 | 3 | 6995011 | Vis | | | |
| 85 | 1 | 6995120 | Joint d'étanchéité | | | |
| 86 | 1 | 6995121 | Caoutchouc | | | |
| 87 | 1 | 6995122 | Pivot | | | |
| 88 | 1 | 6995106 | Bande Frein | | | |
| 89 | 1 | 123665001/0 cliquez ici | Rouleau | | | |
| 90 | 2 | 6995015 | Anneau Élastique | | | |
| 91 | 1 | 6995059 | Ressort Frein | | | |
| 92 | 1 | 6995043 | Ens. Friction | | | |
| 93 | 1 | 6995044 | Rondelle | | | |
| 94 | 1 | 6995095 | Ressort | | | |
| 95 | 1 | 6995079 | Roulement À Aiguilles | | | |
| 96 | 1 | 6995094 | Cloche Embrayage | | | |
| 97 | 1 | 6995128 | Ens. Roue Dentée | | | |
| 98 | 1 | 6995096 | Rondelle | | | |
| 99 | 1 | 6995074 | Ecrou | | | |
| 101 | 1 | 6995104 | Tube Aspiration Huile | | | |
| 102 | 1 | 6995105 | Tuyau Refoul. Huile | | | |
| 105 | 1 | 6995038 | Caoutchouc Anti-Vibrations | | | |
| 106 | 1 | 6995023 | Vis | | | |


Copyright ST. S.P.A.

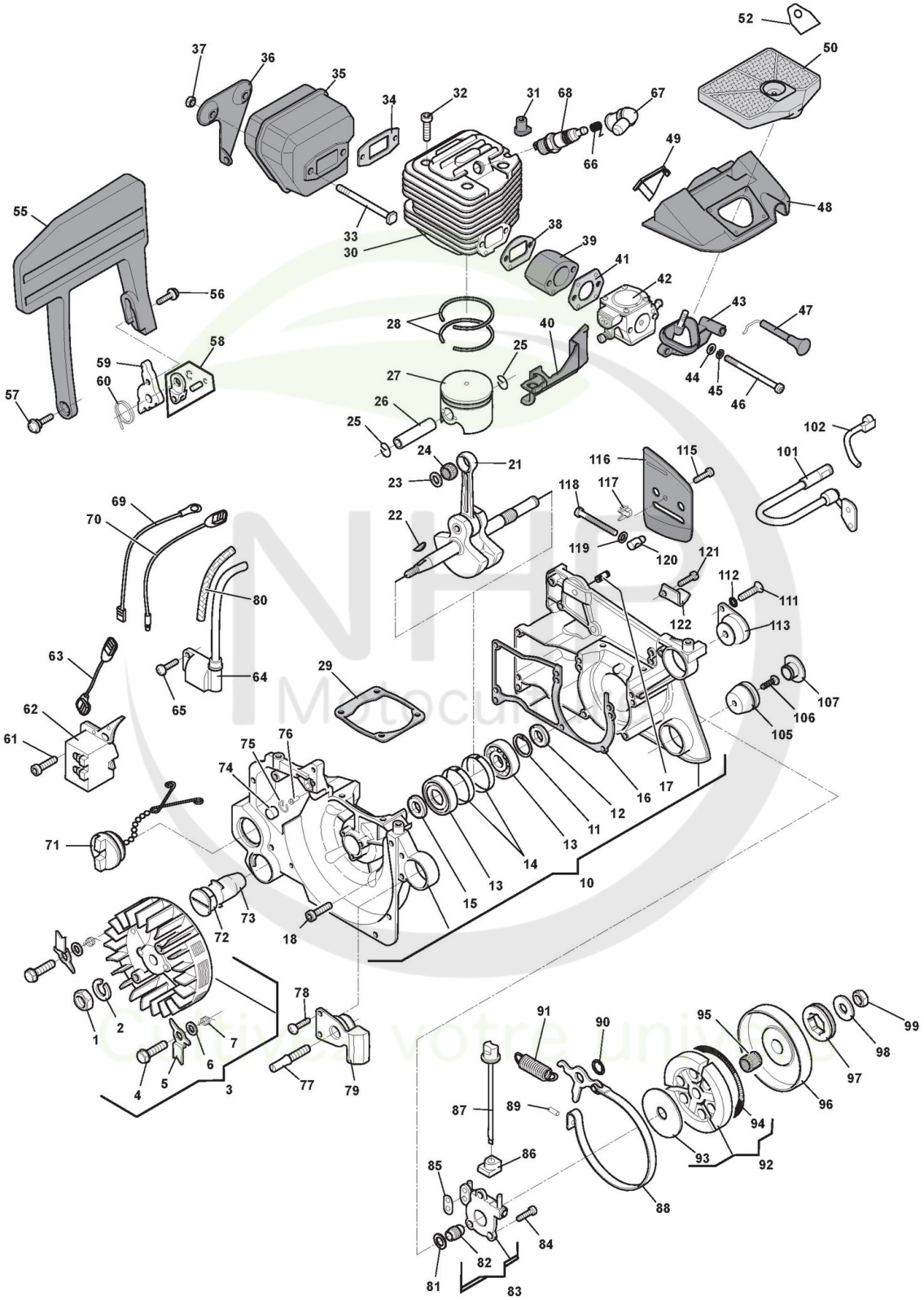



Copyright ST. S.P.A.

| Réf. N° | Q.té : | Code article | Description | Articles | De | Jusqu'à |
|---|---|---|---|---|---|---|
| 107 | 1 | 6995068 | Bouchon | | | |
| 111 | 2 | 6995007 | Vis | | | |
| 112 | 2 | 6995077 | Rondelle | | | |
| 113 | 1 | 6995039 | Caoutchouc Anti-Vibrations | | | |
| 115 | 1 | 6995006 | Vis | | | |
| 116 | 1 | 6995117 | Plaque Base Guide Externe | | | |
| 117 | 1 | 6995086 | Vis | | | |
| 118 | 1 | 6995085 | Vis | | | |
| 119 | 1 | 123657003/0 cliquez ici | Rondelle | | | |
| 120 | 1 | 6995078 | Goujon Tendeur De Chaîne | | | |
| 121 | 1 | 6995031 | Vis | | | |
| 122 | 1 | 6995030 | Butée Chaîne | | | |

NHP Motoculture
Cultivez votre univers


Copyright ST. S.P.A.

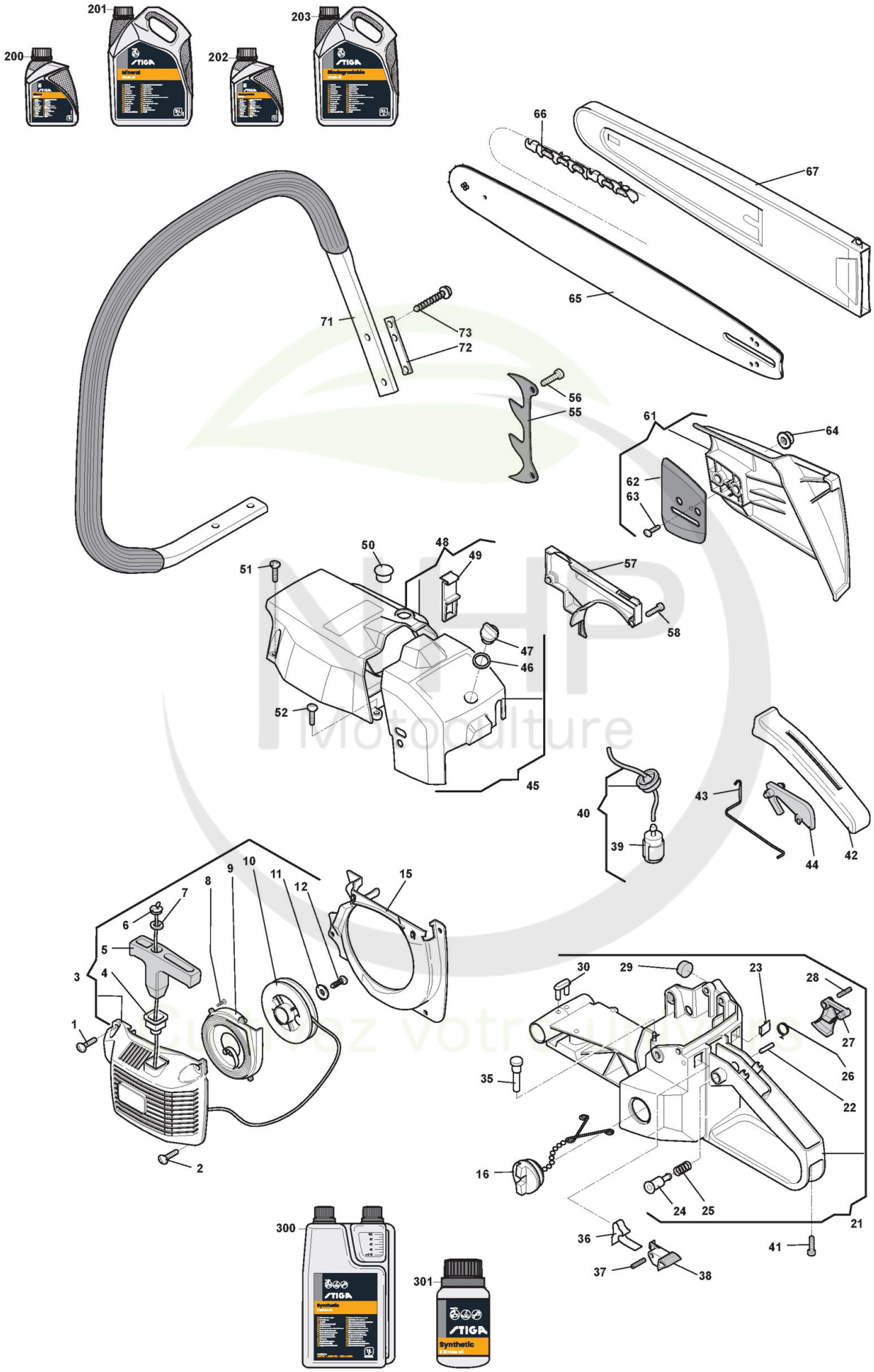



Copyright ST. S.P.A.

# Carter

| Réf. N° | Q.té : | Code article | Description | Articles | De | Jusqu'à |
|---|---|---|---|---|---|---|
| 1 | 1 | 6995142 | Vis | | | |
| 2 | 3 | 6995050 | Vis | | | |
| 3 | 1 | 6995157 | Démarreur Jaune | | | |
| 4 | 1 | 6995049 | Rondelle Caoutchouc | | | |
| 5 | 1 | 6995125 | Poignée Démarrage | | | |
| 6 | 1 | 6995124 | Câble Démarrage | | | |
| 7 | 1 | 6995076 | Rondelle | | | |
| 8 | 2 | 6995061 | Vis | | | |
| 9 | 1 | 6995123 | Ressort Démarrage | | | |
| 10 | 1 | 6995099 | Poulie Démarrage | | | |
| 11 | 1 | 6995080 | Rondelle | | | |
| 12 | 1 | 6995023 | Vis | | | |
| 15 | 1 | 6995131 | Convoyeur Air | | | |
| 16 | 1 | 6995091 | Bouhcon Mélange | | | |
| 21 | 1 | 6995153 | Ens. Poignée | | | |
| 22 | 1 | 6995082 | Butée | | | |
| 23 | 1 | 6995089 | Plaquette | | | |
| 24 | 1 | 6995073 | Bouton | | | |
| 25 | 1 | 6995072 | Ressort | | | |
| 26 | 1 | 6995114 | Ressort | | | |
| 27 | 1 | 6995134 | Levier Accélérateur | | | |
| 28 | 1 | 6995016 | Goupille | | | |
| 29 | 1 | 6995034 | Caoutchouc Anti-Vibrations | | | |
| 30 | 1 | 6995063 | Caoutchouc Anti-Vibrations | | | |
| 35 | 1 | 6995092 | Vanne Évent | | | |
| 36 | 1 | 6995115 | Ressort | | | |
| 37 | 1 | 6995035 | Goupille Élastique | | | |
| 38 | 1 | 6995090 | Interrupteur | | | |
| 39 | 1 | 6995069 | Plongeur Mélange | | | |
| 40 | 1 | 6995116 | Tuyau Plongeur Mélange | | | |
| 41 | 1 | 6995113 | Vis | | | |
| 42 | 1 | 6995154 | Couvercle Poignée | | | |
| 43 | 1 | 6995052 | Levier Accélérateur | | | |
| 44 | 1 | 6995135 | Levier De Sécurité | | | |
| 45 | 1 | 6995158 | Couvre-Filtre Jaune | | | |
| 46 | 1 | 6995133 | Joint d'étanchéité | | | |
| 47 | 1 | 6995127 | Pommeau | | | |
| 48 | 1 | 6995152 | Couvre-Cylindre Jaune | | | |
| 49 | 1 | 6995110 | Régulateur Chauffage | | | |
| 50 | 1 | 6995111 | Caoutchouc | | | |
| 51 | 1 | 6995012 | Vis | | | |
| 52 | 2 | 6995010 | Vis | | | |
| 55 | 1 | 6995060 | Cliquet | | | |
| 56 | 2 | 6995031 | Vis | | | |
| 57 | 1 | 6995161 | Couvercle Frein | | | |
| 58 | 2 | 6995009 | Vis | | | |
| 61 | 1 | 6995156 | Carter Friction Jaune | | | |
| 62 | 1 | 6995118 | Plaque Base Guide Externe | | | |


Copyright ST. S.P.A.

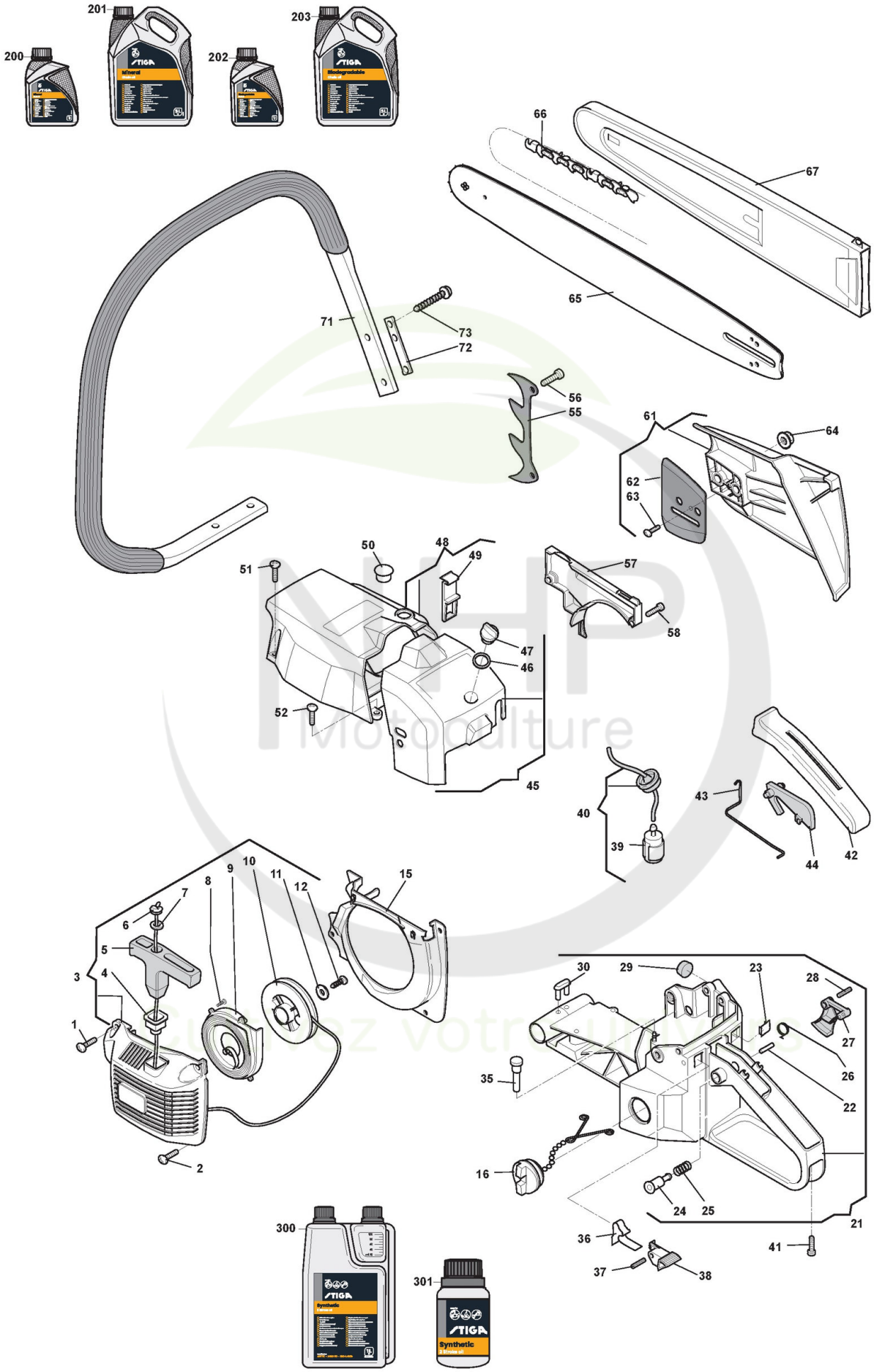



Copyright ST. S.P.A.

| Réf. N° | Q.té : | Code article | Description | Articles | De | Jusqu'à |
|---|---|---|---|---|---|---|
| 63 | 1 | 6995013 | Vis | | | |
| 64 | 2 | 6995097 | Ecrou | | | |
| 65 | 1 | 6995316 | Guide-Chaîne 18inch | | | |
| 66 | 1 | 4113742 | Chaîne 18inch | | | |
| 67 | 1 | 4181497 | Protège-Guide 18inch | | | |
| 71 | 1 | 6995057 | Main-Courante | | | |
| 72 | 2 | 6995067 | Plaquette | | | |
| 73 | 4 | 6995002 | Vis | | | |
| 200 | 1 | 1111-9228-01 cliquez ici | Huile Chaine 1Lt Minerale | | | |
| 200 | 1 | 1111-9267-01 cliquez ici | Only for Italian Market | Solo per mercato Italiano/Only Italian Market | | |
| 201 | 1 | 1111-9229-01 cliquez ici | Huile Chaine 5Lt Minerale | | | |
| 201 | 1 | 1111-9268-01 cliquez ici | Only for Italian Market | Solo per mercato Italiano/Only Italian Market | | |
| 202 | 1 | 1111-9276-01 cliquez ici | Huile Chaine 5Lt Biodégradable | | | |
| 202 | 1 | 1111-9328-01 cliquez ici | Only for Italian Market | Solo per mercato Italiano/Only Italian Market | | |
| 203 | 1 | 1111-9247-01 cliquez ici | Huile Chaine 5Lt Biodégradable | | | |
| 203 | 1 | 1111-9247-02 cliquez ici | Only for Italian Market | Solo per mercato Italiano/Only Italian Market | | |
| 300 | 1 | 1111-9230-01 cliquez ici | Huile moteur synthétique 2 temps 1 Lt, Dozer | | | |
| 300 | 1 | 1111-9243-01 cliquez ici | Only for Italian Market | Solo per mercato Italiano/Only Italian Market | | |
| 301 | 1 | 1111-9231-01 cliquez ici | Huile moteur synthétique 2 temps 0,1 Lt | | | |
| 301 | 1 | 1111-9269-01 cliquez ici | Only for Italian Market | Solo per mercato Italiano/Only Italian Market | | |

NHP Motoculture
Cultivez votre univers


Copyright ST. S.P.A.