Retrouvez cette pièce sur nhp-motoculture.fr en cliquant sur le numéro de référence

# STIGA

## SP 510 (2007)

15-4116-12

# Spare parts list
# Reservdelar
# Repuestos
# Ersatzteile
# Pièces détachées
# Reserve onderdelen
# Catalogo ricambi

NHP Motoculture
Cultivez votre univers

● Use ST. S.p.A.  Genuine Spare Parts specified in the parts list for repair and/or replacement.
● The contents described in the parts list may change due to improvement.
● The drawings of the spare parts are only indicative And might Not represent the part in question exactly.
● The indications "right" - "left" - "front" - "rear" refer to the position of the operator when using the machine.
● When placing orders of parts for repair And/Or replacement, make sure that the illustrated parts list Is the one applying to the machine's year of manufacture, as shown on the identification plate attached to the machine.

All rights reserved. No part Of this material may be reproduced Or transmitted, in any form Or by any means, electronic Or mechanical, including photocopying, recording Or by any information storage And retrieval system, without permision in writing from ST. S.p.A.


Copyright ST. S.P.A.

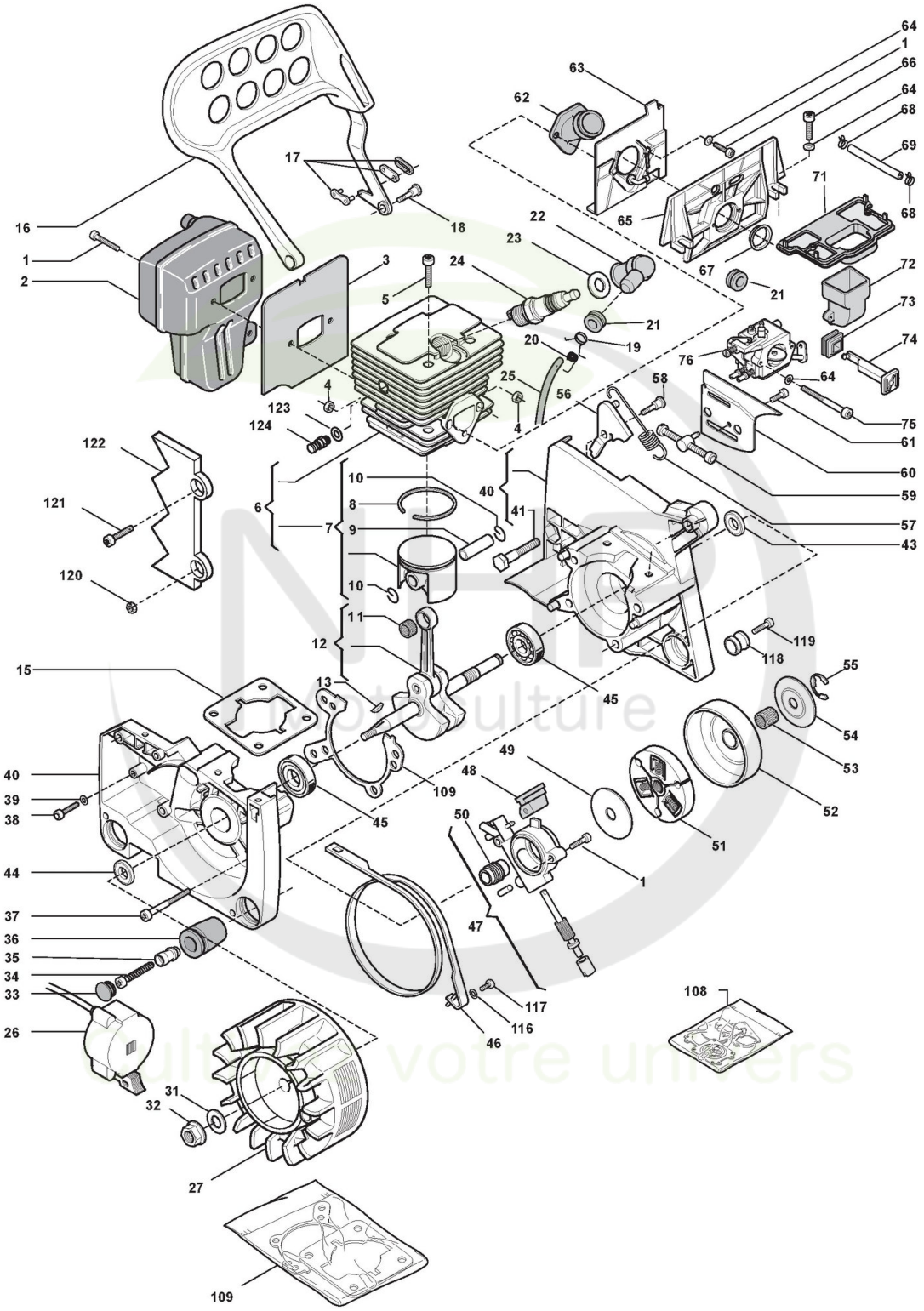



Copyright ST. S.P.A.

# Moteur

| Réf. N° | Q.té : | Code article | Description | Articles | De | Jusqu'à |
|---|---|---|---|---|---|---|
| 1 | 6 | 2135030 | Vis | | | |
| 2 | 1 | 4121931 | Ens. Silencieux | | | |
| 3 | 1 | 3615180 | Garniture Silencieux | | | |
| 4 | 4 | 2432040 | Ecrou | | | |
| 5 | 4 | 2135030 | Vis | | | |
| 6 | 1 | 3L8540970/2 cliquez ici | Use 8540970/2 | | | |
| 7 | 1 | 8540960 | Ens.Piston Ø 45 | | | |
| 8 | 1 | 3123110 | Collier Élastique Ø 45 | | | |
| 9 | 1 | 3158080 | Pointeau Piston | | | |
| 10 | 2 | 3356020 | Circlip Pointeau | | | |
| 11 | 1 | 3116020 | Roulement À Aiguilles | | | |
| 12 | 1 | 8251360 | Arbre Moteur | | | |
| 13 | 1 | 3151010 | Languette Volant | | | |
| 15 | 1 | 3724190 | Garniture Cylindre | | | |
| 16 | 1 | 4563940 | Protège-Main | | | |
| 17 | 1 | 4250720 | Jonction Chaîne | | | |
| 18 | 1 | 1L3630660/1 cliquez ici | Vis | | | |
| 19 | 1 | 3657450 | Collier Suppl. Fil Bobine | | | |
| 20 | 1 | 3657050 | Ressort Fixation Bougie | | | |
| 21 | 2 | 3745130 | Caoutchouc Passe-Câble | | | |
| 22 | 1 | 3748880 | Capuchon Bougie | | | |
| 23 | 1 | 3721420 | Rondelle | | | |
| 24 | 1 | 3210024 | Bougie | | | |
| 25 | 1 | 3211080 | Câble Bougie | | | |
| 26 | 1 | 3210690 | Bobine Électronique | | | |
| 27 | 1 | 4541220 | Volant Aimant | | | |
| 31 | 1 | 2312080 | Rondelle | | | |
| 32 | 1 | 2432050 | Ecrou | | | |
| 33 | 5 | 3749837 | Bouchon | | | |
| 34 | 8 | 2123030 | Vis | | | |
| 35 | 5 | 3642680 | Douille | | | |
| 36 | 5 | 3744250 | Caoutchouc Anti-Vibrations | | | |
| 37 | 4 | 2135130 | Vis | | | |
| 38 | 2 | 2132510 | Vis | | | |
| 39 | 2 | 2321050 | Rondelle | | | |
| 40 | 1 | 8520940 | Carter Moteur | | | |
| 41 | 2 | 1L2112460/1 cliquez ici | Vis | | | |
| 43 | 1 | 3121120 | Anneau De Tenue | | | |
| 44 | 1 | 3121070 | Anneau De Tenue | | | |
| 45 | 2 | 3112030 | Roulement À Billes | | | |
| 46 | 1 | 3613760 | Bande Frein | | | |
| 47 | 1 | 8251590 | Ens. Pompe À Huile | Replaced by 4251591 (worm 3180310 not included on 4251591) | | |
| 48 | 1 | 3744730 | Caoutchouc Refoul. Huile | | | |
| 49 | 1 | 3613770 | Rondelle | | | |
| 50 | 1 | 3180310 | Vis | | | |
| 51 | 1 | 3L4252820/1 cliquez ici | Ens. Friction | | | |
| 52 | 1 | 4121960 | Cloche Embrayage | | | |
| 53 | 1 | 3114080 | Roulement À Aiguilles | | | |


Copyright ST. S.P.A.

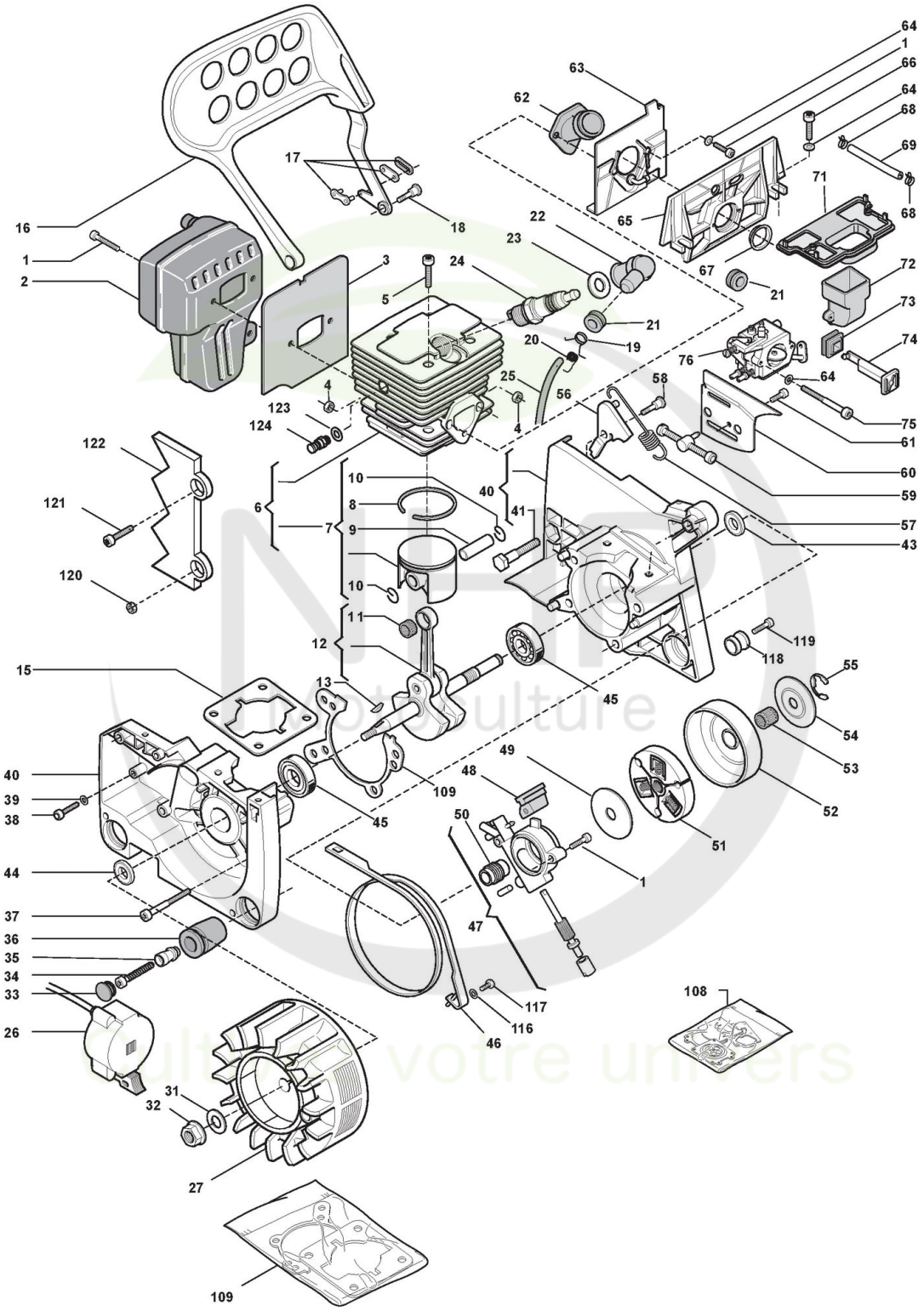



Copyright ST. S.P.A.

| Réf. N° | Q.té : | Code article | Description | Articles | De | Jusqu'à |
|---|---|---|---|---|---|---|
| 54 | 1 | 3612620 | Rondelle | | | |
| 55 | 1 | 112000955/0 cliquez ici | Anneau Benzing ø8 | | | |
| 56 | 1 | 4121970 | Levier Bande Frein | | | |
| 57 | 1 | 3654580 | Ressort Frein | | | |
| 58 | 1 | 3630670 | Pivot | | | |
| 59 | 1 | 4251710 | Tendeur Chaîne | | | |
| 60 | 1 | 3613880 | Plaque Base Guide Externe | | | |
| 61 | 1 | 2132500 | Vis | | | |
| 62 | 1 | 3744710 | Collecteur D'Aspiration | | | |
| 63 | 1 | 4251730 | Bride Collect. Aspiration | | | |
| 64 | 10 | 2312090 | Rondelle | | | |
| 65 | 1 | 4520960 | Carburettor Support | | | |
| 66 | 9 | 2135040 | Vis | | | |
| 67 | 1 | 3613900 | Douille | | | |
| 68 | 2 | 3657140 | Collier | | | |
| 69 | 1 | 3782850 | Tuyau Pulse | | | |
| 71 | 1 | 3781580 | Air Filter Housing | | | |
| 72 | 1 | 3750320 | Support Filtre À Air | | | |
| 73 | 1 | 3745650 | Caoutchouc Levier Air | | | |
| 74 | 1 | 3743407 | Levier Air | | | |
| 75 | 2 | 2135110 | Vis | | | |
| 76 | 1 | 123054002/2 cliquez ici | Carburateur | | | |
| 108 | 1 | 8724090 | Kit Membrane Carburateur | | | |
| 109 | 1 | 8724230 | Kit joint d'étanchéité | | | |
| 116 | 1 | 2125010 | Vis | | | |
| 117 | 1 | 2312120 | Rondelle | | | |
| 118 | 1 | 3749400 | Butée Chaîne | | | |
| 119 | 1 | 2135050 | Vis | | | |
| 120 | 1 | 2432040 | Ecrou | | | |
| 121 | 1 | 2135010 | Vis | | | |
| 122 | 1 | 3L3614510/1 cliquez ici | Chain-Saw Hinge 460/510 | | | |
| 123 | 1 | 2360060 | Rondelle | | | |
| 124 | 1 | 3L4252080/2 cliquez ici | Décompresseur | | | |

NHP Motoculture
Cultivez votre univers


Copyright ST. S.P.A.

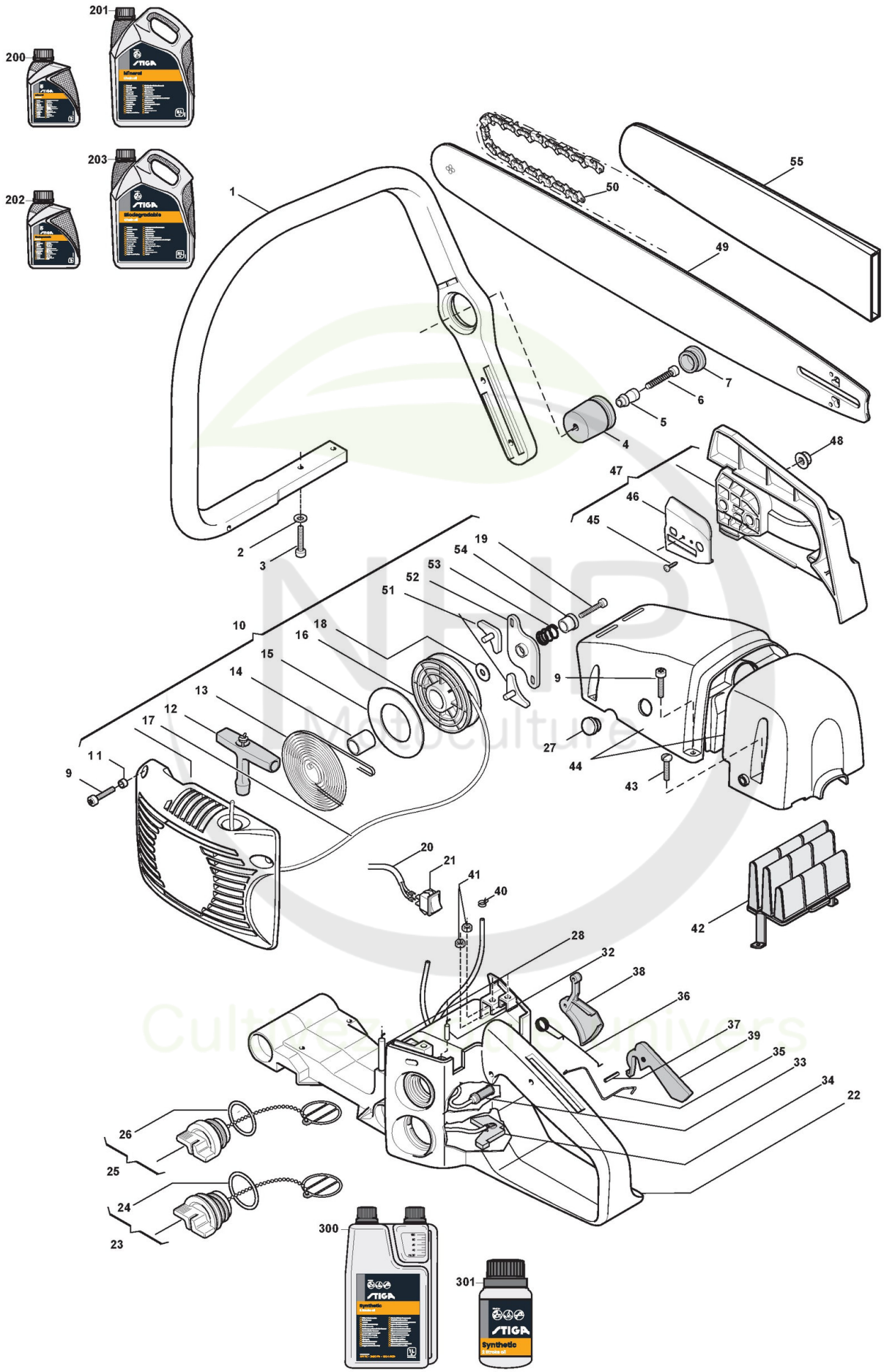



Copyright ST. S.P.A.

# Carter

| Réf. N° | Q.té : | Code article | Description | Articles | De | Jusqu'à |
|---|---|---|---|---|---|---|
| 1 | 1 | 4562397 | Poignèe | | | |
| 2 | 10 | 2312090 | Rondelle | | | |
| 3 | 4 | 2123030 | Vis | | | |
| 4 | 5 | 3744250 | Caoutchouc Anti-Vibrations | | | |
| 5 | 5 | 3642680 | Douille | | | |
| 6 | 7 | 2135030 | Vis | | | |
| 7 | 5 | 3749837 | Bouchon | | | |
| 9 | 9 | 2135040 | Vis | | | |
| 10 | 1 | 4252176 | Démarreur Orange | | | |
| 10 | 1 | 4252730 | Démarreur Jaune | | | |
| 11 | 4 | 2382250 | Douille | | | |
| 12 | 1 | 3749437 | Poignée Démarrage | | | |
| 13 | 1 | 4611480 | Ressort Démarrage | | | |
| 14 | 1 | 3623510 | Douille | | | |
| 15 | 1 | 3723640 | Disque  Ressort Démarrage | | | |
| 16 | 1 | 4563040 | Poulie Démarrage | | | |
| 17 | 1 | 3784010 | Câble Démarrage | | | |
| 18 | 1 | 3613420 | Rondelle | | | |
| 19 | 1 | 2123030 | Vis | | | |
| 20 | 1 | 8211060 | Câble Arrêt Avec Gaine | | | |
| 21 | 1 | 3210970 | Interrupteur D'Arrêt | | | |
| 22 | 1 | 383300000/1 cliquez ici | Ens. Poignée | | | |
| 23 | 1 | 4250950 | Bouhcon Mélange | | | |
| 24 | 1 | 3721300 | O-Ring | | | |
| 25 | 1 | 4250960 | Bouchon D'Huile | | | |
| 26 | 1 | 3721330 | O-Ring | | | |
| 27 | 1 | 3750550 | Bouchon Jaune | | | |
| 27 | 1 | 3750555 | Bouchon Orange | | | |
| 28 | 1 | 4253580 | Tuyau Évent Mélange | | | |
| 32 | 1 | 4253690 | Tuyau Évent Huile | | | |
| 33 | 1 | 8782880 | Ens. Filtre À Huile | | | |
| 34 | 1 | 8782870 | Filtre D'Aspiration | | | |
| 35 | 1 | 3655290 | Tige Accélérateur | | | |
| 36 | 1 | 3654180 | Ressort | | | |
| 37 | 2 | 3314140 | Goupille | | | |
| 38 | 1 | 3743387 | Levier Accélérateur | | | |
| 39 | 1 | 3743397 | Levier De Sécurité | | | |
| 40 | 1 | 3320170 | Collier | | | |
| 41 | 4 | 2412030 | Ecrou | | | |
| 42 | 1 | 3781590 | Filtre À Air | | | |
| 43 | 2 | 2653190 | Vis | | | |
| 44 | 1 | 3L8563500/1 cliquez ici | Couv.-Filtre/Cylindre Jaune | | | |
| 44 | 1 | 3L8563505/1 cliquez ici | Couv.-Filtre/Cylindre Orange | | | |
| 45 | 1 | 2123060 | Vis | | | |
| 46 | 1 | 3613890 | Plaque Base Guide Externe | | | |
| 47 | 1 | 4252830 | Carter Friction Jaune | | | |
| 47 | 1 | 4252835 | Ens. Carter Friction Orange | | | |
| 48 | 2 | 2670120 | Mutter | | | |


Copyright ST. S.P.A.

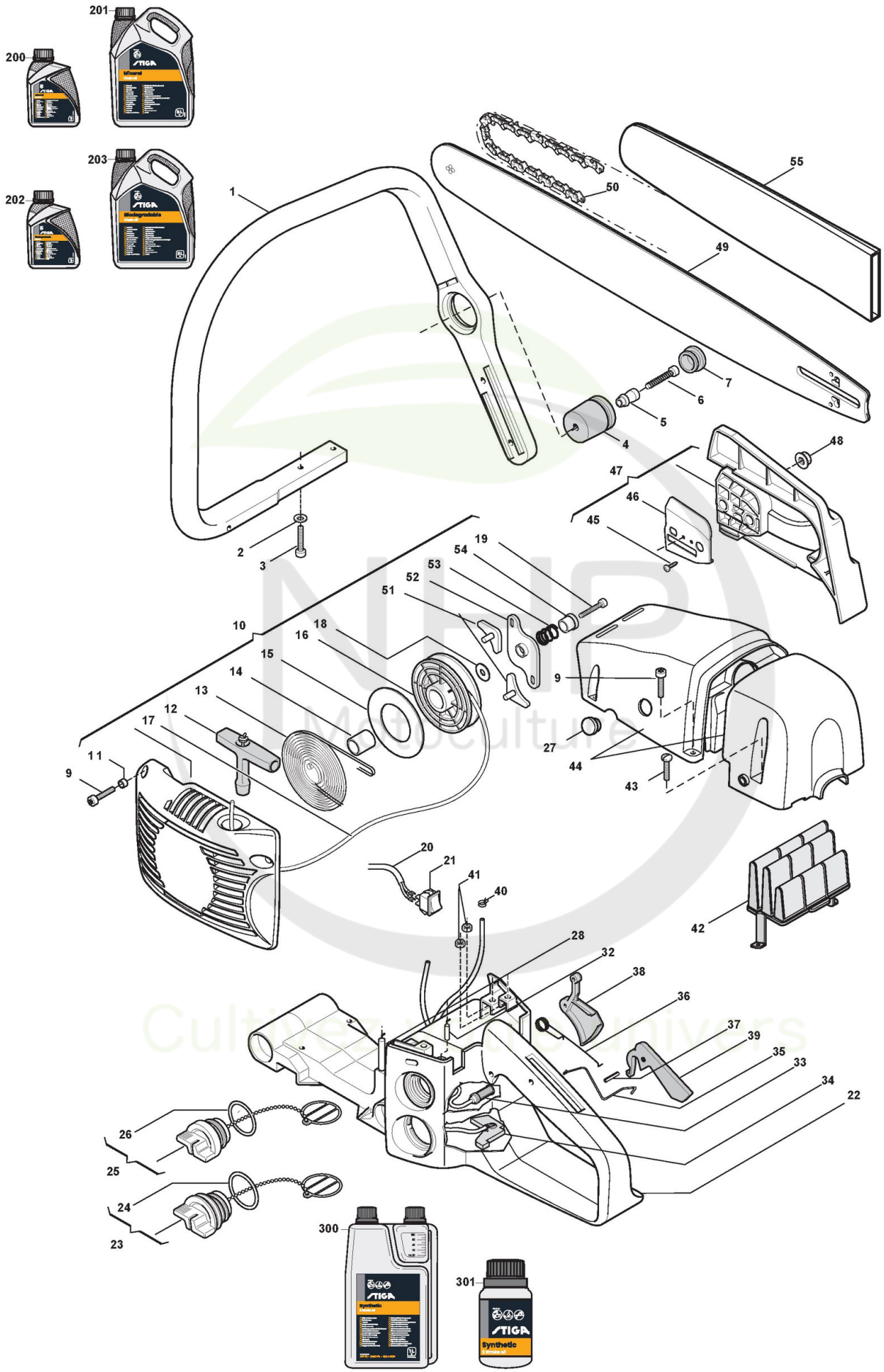



Copyright ST. S.P.A.

| Réf. N° | Q.té : | Code article | Description | Articles | De | Jusqu'à |
|---|---|---|---|---|---|---|
| 49 | 1 | 4112660 | Guide-Chaîne 13inch | | | |
| 50 | 1 | 4113720 | Chaîne 13inch | | | |
| 51 | 2 | 3750080 | Fixation Démarreur | | | |
| 52 | 1 | 3750090 | Guide Crochets Démarrage | | | |
| 53 | 1 | 3654390 | Ressort | | | |
| 54 | 1 | 3642980 | Douille | | | |
| 55 | 1 | 4181307 | Protège-Guide 16inch | | | |
| 200 | 1 | 1111-9228-01 cliquez ici | Huile Chaine 1Lt Minerale | | | |
| 200 | 1 | 1111-9267-01 cliquez ici | Only for Italian Market | Solo per mercato Italiano/Only Italian Market | | |
| 201 | 1 | 1111-9229-01 cliquez ici | Huile Chaine 5Lt Minerale | | | |
| 201 | 1 | 1111-9268-01 cliquez ici | Only for Italian Market | Solo per mercato Italiano/Only Italian Market | | |
| 202 | 1 | 1111-9276-01 cliquez ici | Huile Chaine 5Lt Biodégradable | | | |
| 202 | 1 | 1111-9328-01 cliquez ici | Only for Italian Market | Solo per mercato Italiano/Only Italian Market | | |
| 203 | 1 | 1111-9247-01 cliquez ici | Huile Chaine 5Lt Biodégradable | | | |
| 203 | 1 | 1111-9247-02 cliquez ici | Only for Italian Market | Solo per mercato Italiano/Only Italian Market | | |
| 300 | 1 | 1111-9230-01 cliquez ici | Huile moteur synthétique 2 temps 1 Lt, Dozer | | | |
| 300 | 1 | 1111-9243-01 cliquez ici | Only for Italian Market | Solo per mercato Italiano/Only Italian Market | | |
| 301 | 1 | 1111-9231-01 cliquez ici | Huile moteur synthétique 2 temps 0,1 Lt | | | |
| 301 | 1 | 1111-9269-01 cliquez ici | Only for Italian Market | Solo per mercato Italiano/Only Italian Market | | |

NHP Motoculture
Cultivez votre univers


Copyright ST. S.P.A.