Retrouvez cette pièce sur nhp-motoculture.fr en cliquant sur le numéro de référence

STIGA

SE 180 (2006)

291516002/04

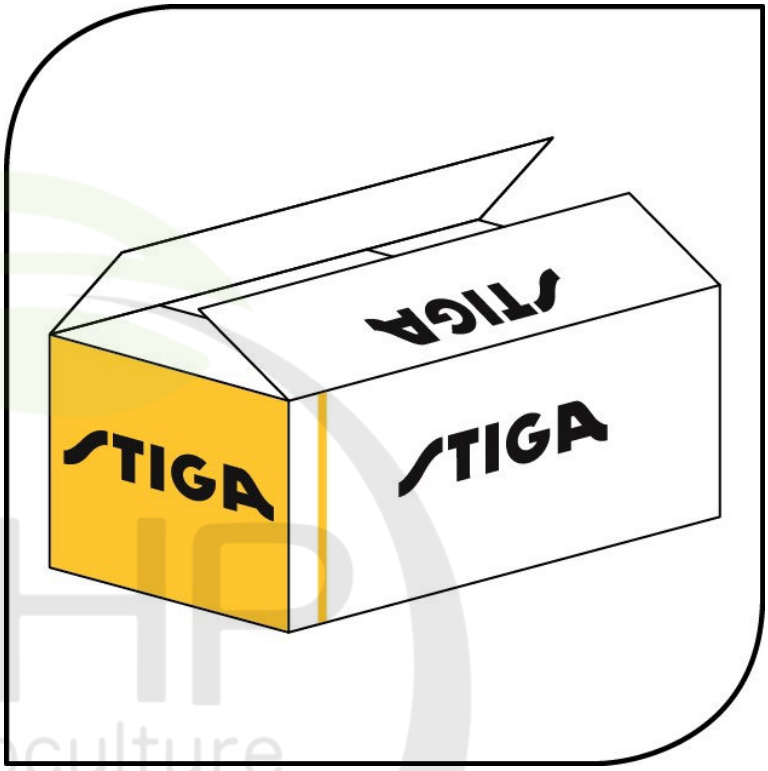

Spare parts list
Reservdelar
Repuestos
Ersatzteile
Pièces détachées
Reserve onderdelen
Catalogo ricambi

NHP Motoculture
Cultivez votre univers

● Use ST. S.p.A. Genuine Spare Parts specified in the parts list for repair and/or replacement.
● The contents described in the parts list may change due to improvement.
● The drawings of the spare parts are only indicative And might Not represent the part in question exactly.
● The indications "right" - "left" - "front" - "rear" refer to the position of the operator when using the machine.
● When placing orders of parts for repair And/Or replacement, make sure that the illustrated parts list Is the one applying to the machine's year of manufacture, as shown on the identification plate attached to the machine.

All rights reserved. No part Of this material may be reproduced Or transmitted, in any form Or by any means, electronic Or mechanical, including photocopying, recording Or by any information storage And retrieval system, without permision in writing from ST. S.p.A.

Copyright ST. S.P.A.

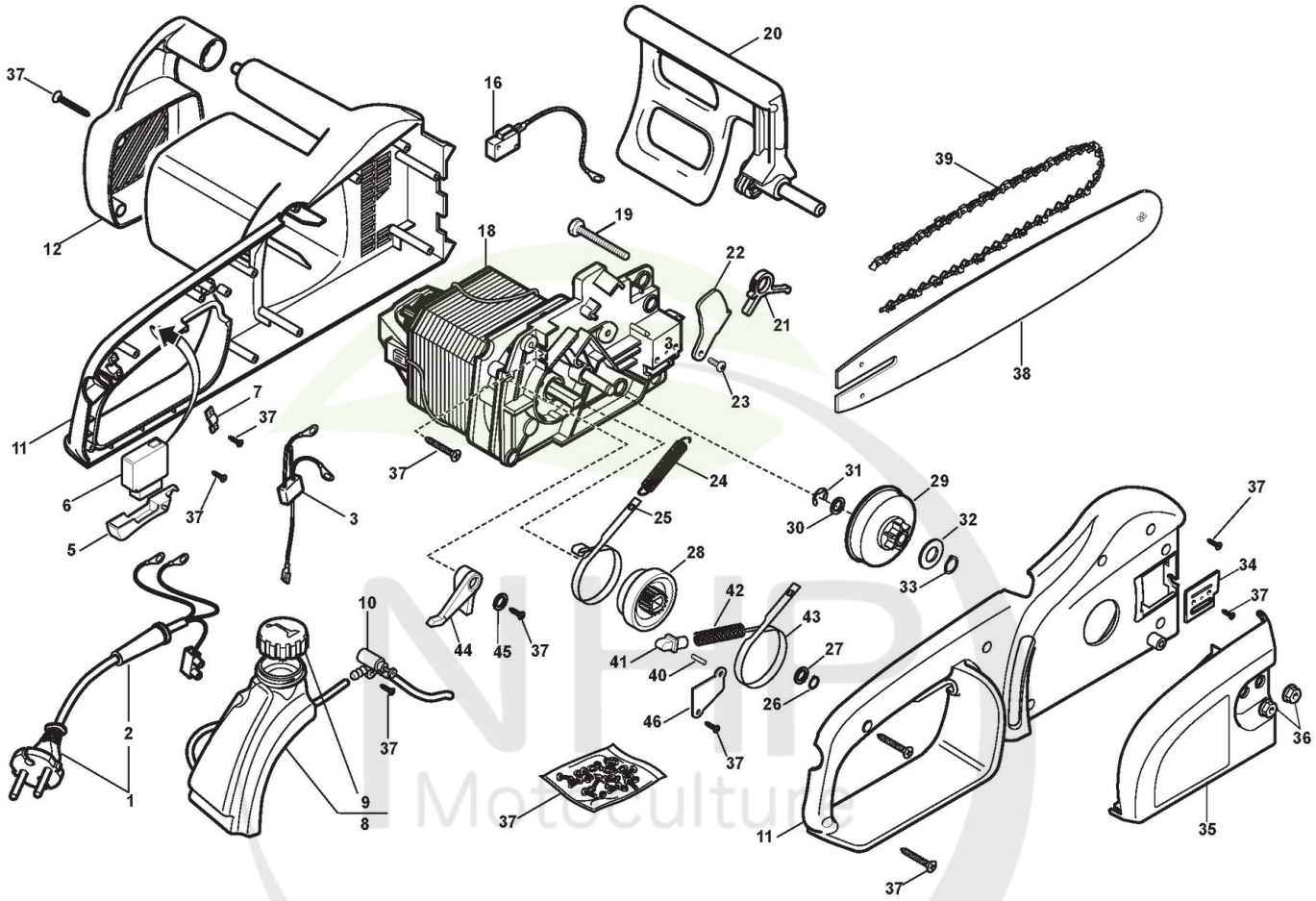

NHP Motoculture
Cultivez votre univers

Copyright ST. S.P.A.

Tronçonneuse électrique

Réf. N°	Q.té :	Code article	Description	Articles	De	Jusqu'à
1	1	6980500	Ens. Câble Alim.			
2	1	6980501	Passe-Câble Alim.			
3	1	6980539	Condensateur			
5	1	6980502	Levier Commande Interrup.			
6	1	6980503	Interrupteur			
7	1	6980504	Etrier			
8	1	6980505	Réservoir Huile			
9	1	6980506	Bouchon Huile			
10	1	6980507	Pompe À Huile			
11	1	6980508	Ens. Poignée Jaune			
12	1	6980510	Protecteur Moteur Gris			
16	1	6980514	Interrupteur			
18	1	6980516	Moteur			
19	2	6980517	Vis			
20	1	6980518	Ens. Protège-Main			
21	1	6980519	Levier			
22	1	6980520	Levier Bande Frein			
23	1	6980521	Vis			
24	1	6980522	Ressort Frein			
25	1	6980523	Bande Frein			
26	1	6980524	Circlips			
27	1	6980525	Rondelle			
28	1	6980526	Disque Frein			
29	1	6980527	Ens. Roue Dentée			
30	1	6980528	Rondelle			
31	1	6980529	Circlips			
32	1	6980530	Rondelle			
33	1	6980511	Circlips			
34	1	6980531	Tendeur Chaîne			
35	1	6980532	Ens. Carter Chaîne Gris			
36	2	6980533	Ecrou			
37	1	6980534	Dotation Visserie			
38	1	6980694	Guide-Chaîne 16inch			
39	1	4113704	Chaîne 16inch			
40	1	6980540	Pivot			
41	1	6980541	Commande Bande Frein			
42	1	6980542	Ressort Frein			
43	1	6980543	Bande Frein			
44	1	6980544	Levier			
45	1	6980545	Rondelle			
46	1	6980546	Plaquette			

Copyright ST. S.P.A.