Retrouvez cette pièce sur nhp-motoculture.fr en cliquant sur le numéro de référence

STIGA

SC 42 B (2019)

974000100

Spare parts list
Reservdelar
Repuestos
Ersatzteile
Pièces détachées
Reserve onderdelen
Catalogo ricambi

NHP Motoculture
Cultivez votre univers

● Use ST. S.p.A. Genuine Spare Parts specified in the parts list for repair and/or replacement.
● The contents described in the parts list may change due to improvement.
● The drawings of the spare parts are only indicative And might Not represent the part in question exactly.
● The indications "right" - "left" - "front" - "rear" refer to the position of the operator when using the machine.
● When placing orders of parts for repair And/Or replacement, make sure that the illustrated parts list Is the one applying to the machine's year of manufacture, as shown on the identification plate attached to the machine.

All rights reserved. No part Of this material may be reproduced Or transmitted, in any form Or by any means, electronic Or mechanical, including photocopying, recording Or by any information storage And retrieval system, without permision in writing from ST. S.p.A.

Copyright ST. S.P.A.

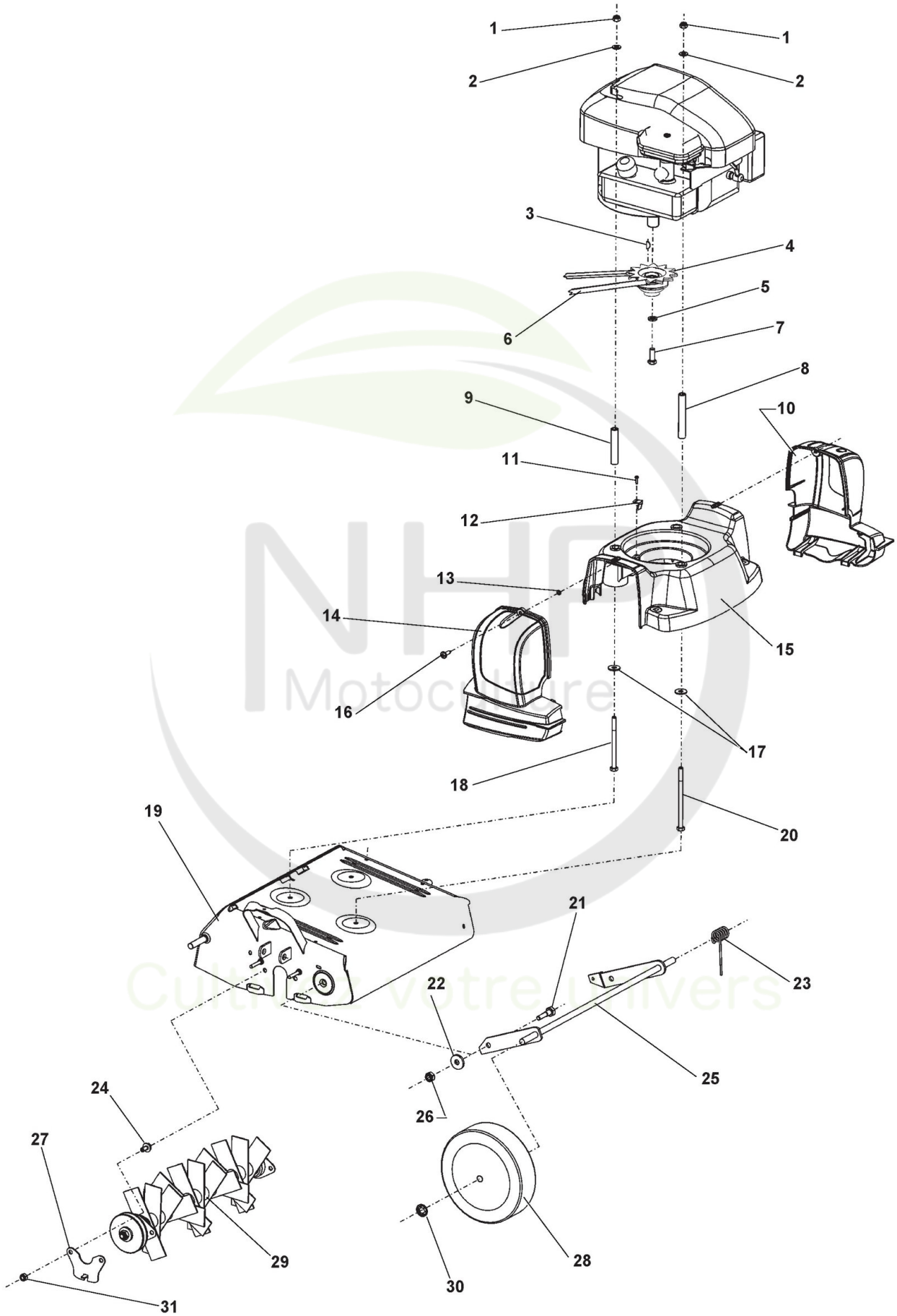

Copyright ST. S.P.A.

Réf. N°	Q.té :	Code article	Description	Articles	De	Jusqu'à
1	3	81.4588.000	Ecrou			
2	3	84.3685.000	Rondelle			
3	1	26.0050.202	Languette			
4	1	41.1025.115	Moteur Poulie			
5	1	84.3755.000	Rondelle de ressort			
6	1	41.1005.108	Courroie			
7	1	26.0050.201	Vis			
8	2	41.1025.112	Tube			
9	1	41.1025.111	Tube			
10	1	41.1005.911	Capot Gauche Gris			
11	1	86.3982.014	Vis			
12	1	41.1005.130	Guide De Courroire			
13	2	84.3723.000	Rondelle			
14	1	41.1005.912	Capot Droit Gris			
15	1	41.1005.910	Support Moteur Gris			
16	2	86.3988.200	Vis			
17	3	84.3708.000	Rondelle			
18	1	86.3076.500	Vis			
19	1	41.1005.121	Carter, Rouge			
20	2	86.3077.000	Vis			
21	1	86.3359.000	Vis			
22	1	84.3818.000	Rondelle			
23	1	41.1015.125	Ressort			
24	4	86.2494.000	Vis			
25	1	41.1015.110	Axe Avant			
26	1	81.4645.000	Ecrou			
27	1	41.1005.113	Protection			
28	2	41.1015.120	Ens. Roue D. 200			
29	1	41.1020.100	Ens. Lame			
30	2	84.3993.500	Fixateur A Couronne			
31	4	81.4588.000	Ecrou			

NHP Motoculture
Cultivez votre univers

Copyright ST. S.P.A.

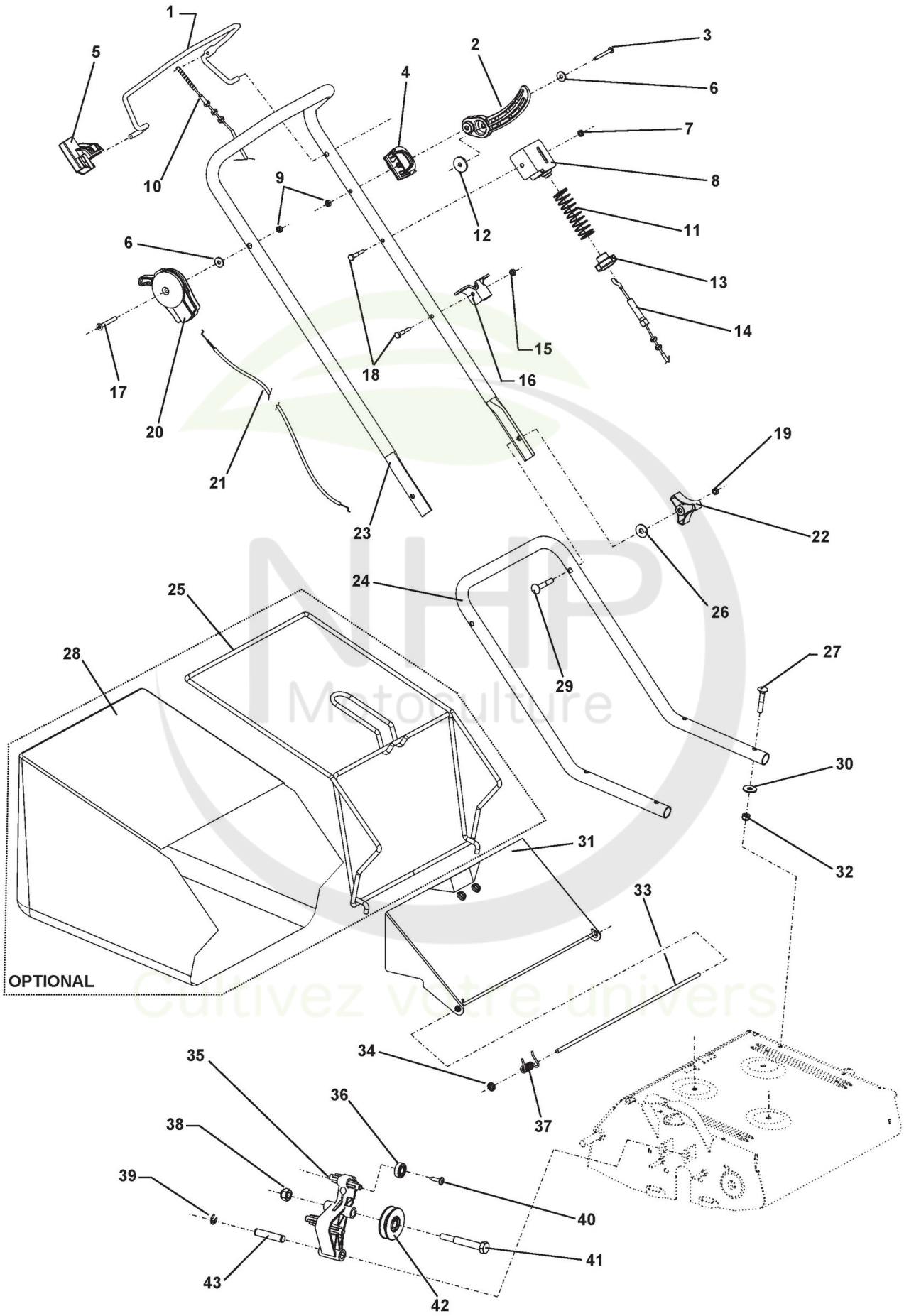

Copyright ST. S.P.A.

Réf. N°	Q.té :	Code article	Description	Articles	De	Jusqu'à
1	1	41.1010.121	Levier			
2	1	41.1010.148	Levier			
3	1	86.1840.265	Vis			
4	1	41.1010.149	Support			
5	1	41.1010.123	Levier De Sécurité			
6	1	84.3619.000	Rondelle			
7	1	81.4548.000	Ecrou			
8	1	41.1010.146	Support			
9	1	81.4548.000	Ecrou			
10	1	41.1010.125	Câble d'embrayage			
11	1	41.1010.129	Ressort			
12	1	84.3622.000	Rondelle			
13	1	41.1010.128	Poignèe			
14	1	41.1010.130	Cable			
15	1	81.4548.000	Ecrou			
16	1	41.1010.141	Declic			
17	1	86.2356.100	Vis			
18	1	86.2300.000	Vis			
19	1	81.4574.000	Ecrou			
20	1	32.1010.920	Ens. Commande d’accelération			
21	1	32.1010.332	Câble Accélérateur			
22	1	37.0015.107	Poignèe			
23	1	41.1010.114	Mancheron Superieure			
24	1	41.1010.110	Mancheron Inferiure			
25	1	41.1020.140	Châssis Bac			
26	1	84.3708.000	Rondelle			
27	4	86.2786.300	Vis			
28	1	41.1020.148	Sac, Toile			
29	1	86.2786.500	Vis			
30	4	84.3708.000	Rondelle			
31	1	41.1005.146	Deflecteur			
32	4	81.4588.000	Ecrou			
33	1	41.1005.140	Axel			
34	2	84.3993.100	Rondelle			
35	1	41.1005.105	Tendeur de courroie			
36	1	81.2505.000	Coussinet			
37	1	41.1005.141	Ressort			
38	1	81.4703.100	Ecrou			
39	1	80.1039.000	Circlips			
40	1	86.3988.200	Vis			
41	1	86.3997.500	Vis			
42	1	41.1005.107	Poulie			
43	1	41.1005.109	Pivot			

Copyright ST. S.P.A.

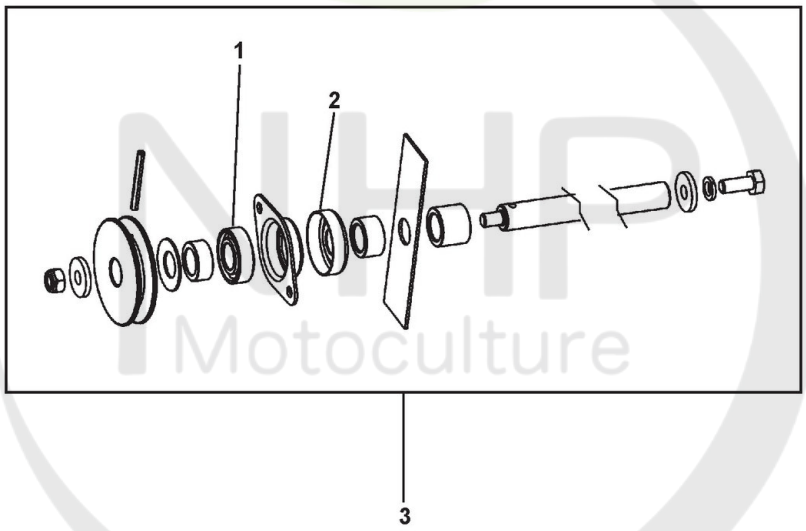

NHP Motoculture
Cultivez votre univers

Copyright ST. S.P.A.

Ens. Lames

Réf. N°	Q.té :	Code article	Description	Articles	De	Jusqu'à
1	2	81.2632.000	Coussinet			
2	2	41.1020.120	Protege-Poussiere			
3	1	41.1020.100	Ens. Lame			

NHP Motoculture
Cultivez votre univers

Copyright ST. S.P.A.