Retrouvez cette pièce sur nhp-motoculture.fr en cliquant sur le numéro de référence

# STIGA

## SC 100e kit (2025)

257022001/UKS

# Spare parts list
# Reservdelar
# Repuestos
# Ersatzteile
# Pièces détachées
# Reserve onderdelen
# Catalogo ricambi

NHP Motoculture
Cultivez votre univers

● Use ST. S.p.A.  Genuine Spare Parts specified in the parts list for repair and/or replacement.
● The contents described in the parts list may change due to improvement.
● The drawings of the spare parts are only indicative And might Not represent the part in question exactly.
● The indications "right" - "left" - "front" - "rear" refer to the position of the operator when using the machine.
● When placing orders of parts for repair And/Or replacement, make sure that the illustrated parts list Is the one applying to the machine's year of manufacture, as shown on the identification plate attached to the machine.

All rights reserved. No part Of this material may be reproduced Or transmitted, in any form Or by any means, electronic Or mechanical, including photocopying, recording Or by any information storage And retrieval system, without permision in writing from ST. S.p.A.


Copyright ST. S.P.A.

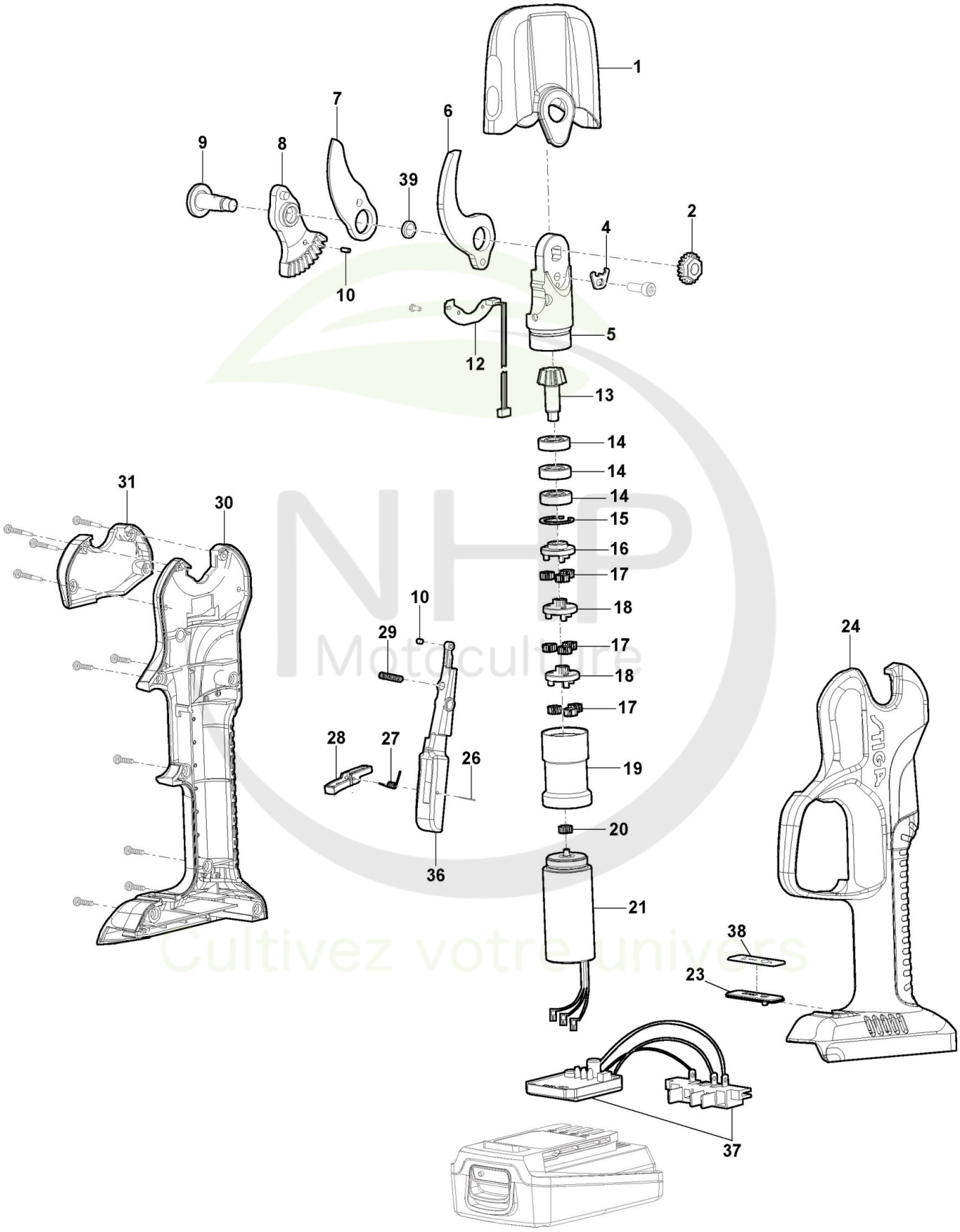



Copyright ST. S.P.A.

# Ciseaux

| Réf. N° | Q.té : | Code article | Description | Articles | De | Jusqu'à |
|---|---|---|---|---|---|---|
| 1 | 1 | 118805742/0 cliquez ici | Couvre-Lame | | | |
| 2 | 1 | 118805743/0 cliquez ici | Ecrou | | | |
| 4 | 1 | 118805744/0 cliquez ici | Rondelle | | | |
| 5 | 1 | 118805745/0 cliquez ici | Support De Lame | | | To |
| 5 | 1 | 118805745/1 cliquez ici | Support De Lame | | From 01-Jan-2024 | |
| 6 | 1 | 118805746/0 cliquez ici | Lame Fixe | | | |
| 7 | 1 | 118805747/0 cliquez ici | Lame Mobile | | | |
| 8 | 1 | 118805748/0 cliquez ici | Engrenage à Lame | | | |
| 9 | 1 | 118805749/0 cliquez ici | Boulon | | | |
| 10 | 1 | 118805750/0 cliquez ici | Aimant | | | |
| 12 | 1 | 118805769/0 cliquez ici | Carte Electronique Lame | | | |
| 13 | 1 | 118805751/0 cliquez ici | Pignon | | | |
| 14 | 3 | 118805752/0 cliquez ici | Coussinet | | | |
| 15 | 1 | 118805753/0 cliquez ici | Circlip | | | |
| 16 | 1 | 118805754/0 cliquez ici | Plaque | | | |
| 17 | 9 | 118805755/0 cliquez ici | Engrenage planétaire | | | |
| 18 | 2 | 118805756/0 cliquez ici | Plaque planétaire | | | |
| 19 | 1 | 118805757/0 cliquez ici | Carter d'engrenage | | | |
| 20 | 1 | 118805758/0 cliquez ici | Engrenage | | | |
| 21 | 1 | 118805759/0 cliquez ici | Moteur Électrique | | | |
| 23 | 1 | 118805760/0 cliquez ici | Plaquette LED | | | |
| 24 | 1 | 118805761/0 cliquez ici | Carter Gauche | | | To |
| 24 | 1 | 118805761/1 cliquez ici | Carter Gauche | | From 01-Jan-2024 | |
| 25 | 1 | 118811080/0 cliquez ici | connecteur de batterie | | | |
| 26 | 1 | 118805762/0 cliquez ici | Pivot | | | |
| 27 | 1 | 118805763/0 cliquez ici | Ressort | | | |
| 28 | 1 | 118805764/0 cliquez ici | Bouton | | | |
| 29 | 1 | 118805765/0 cliquez ici | Ressort | | | |
| 30 | 1 | 118805766/0 cliquez ici | Carter Droit | | | |
| 31 | 1 | 118805767/0 cliquez ici | Couvercle latéral | | | To |
| 31 | 1 | 118805767/1 cliquez ici | Couvercle latéral | | From 01-Jan-2024 | |
| 36 | 1 | 118805771/0 cliquez ici | Levier | | | |
| 37 | 1 | 118805770/0 cliquez ici | PCB et Contacts de la Batterie | | | |
| 38 | 1 | 118806500/0 cliquez ici | Etiquette | | | |
| 39 | 1 | 118806502/0 cliquez ici | Rondelle en Feutre | | | |

NHP Motoculture
Cultivez votre univers


Copyright ST. S.P.A.

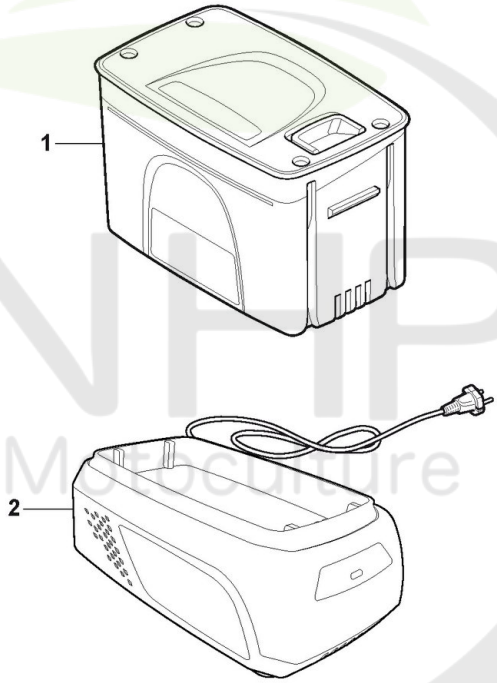


Please Note: These images are for illustrative purposes only.
For more info see descriptions.

NHP Motoculture
Cultivez votre univers


Copyright ST. S.P.A.

## Batterie

| Réf. N° | Q.té : | Code article | Description | Articles | De | Jusqu'à |
|---|---|---|---|---|---|---|
| 1 | 1 | 271012008/ST1 | Batterie 20V - 2Ah | | | |
| 2 | 1 | 271020000/21 | 20V Chargeur - EU prise | | | |
| 2 | 1 | 271020100/21 | 20V Double Chargeur - EU prise | | | |
| 2 | 1 | 271021000/21 | 20V Chargeur - BS prise | | | |
| 2 | 1 | 271021100/21 | 20V Double Chargeur - BS prise | | | |
| 2 | 1 | 271028200/26 | 20V Chargeur - EU+BS prise | | | |

NHP Motoculture
Cultivez votre univers


Copyright ST. S.P.A.