Retrouvez cette pièce sur nhp-motoculture.fr en cliquant sur le numéro de référence

# STIGA

## ES 150 (2010)

291516002/HAN

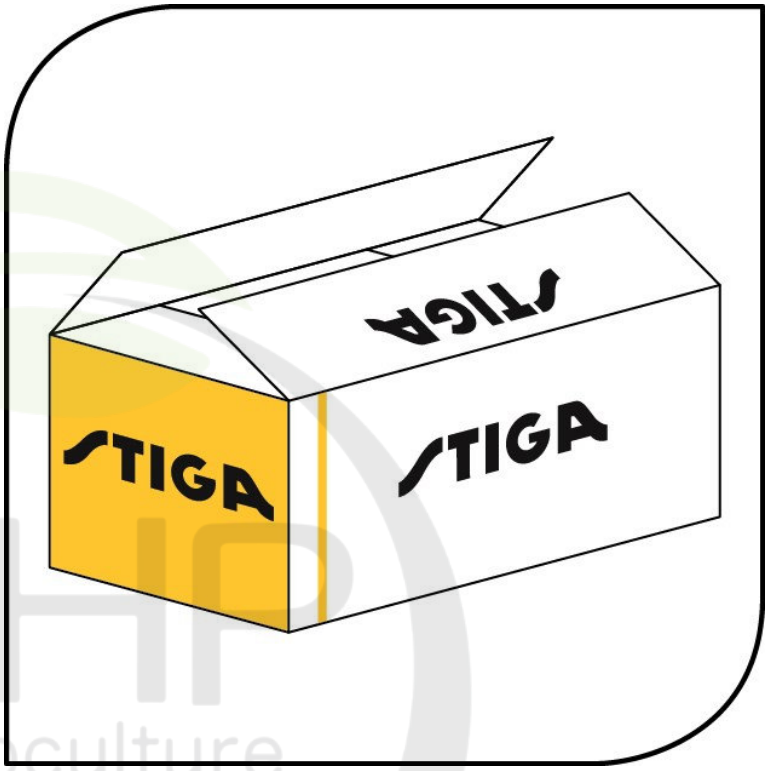


## Spare parts list
## Reservdelar
## Repuestos
## Ersatzteile
## Pièces détachées
## Reserve onderdelen
## Catalogo ricambi

NHP Motoculture
Cultivez votre univers

● Use ST. S.p.A.  Genuine Spare Parts specified in the parts list for repair and/or replacement.
● The contents described in the parts list may change due to improvement.
● The drawings of the spare parts are only indicative And might Not represent the part in question exactly.
● The indications "right" - "left" - "front" - "rear" refer to the position of the operator when using the machine.
● When placing orders of parts for repair And/Or replacement, make sure that the illustrated parts list Is the one applying to the machine's year of manufacture, as shown on the identification plate attached to the machine.

All rights reserved. No part Of this material may be reproduced Or transmitted, in any form Or by any means, electronic Or mechanical, including photocopying, recording Or by any information storage And retrieval system, without permision in writing from ST. S.p.A.


Copyright ST. S.P.A.

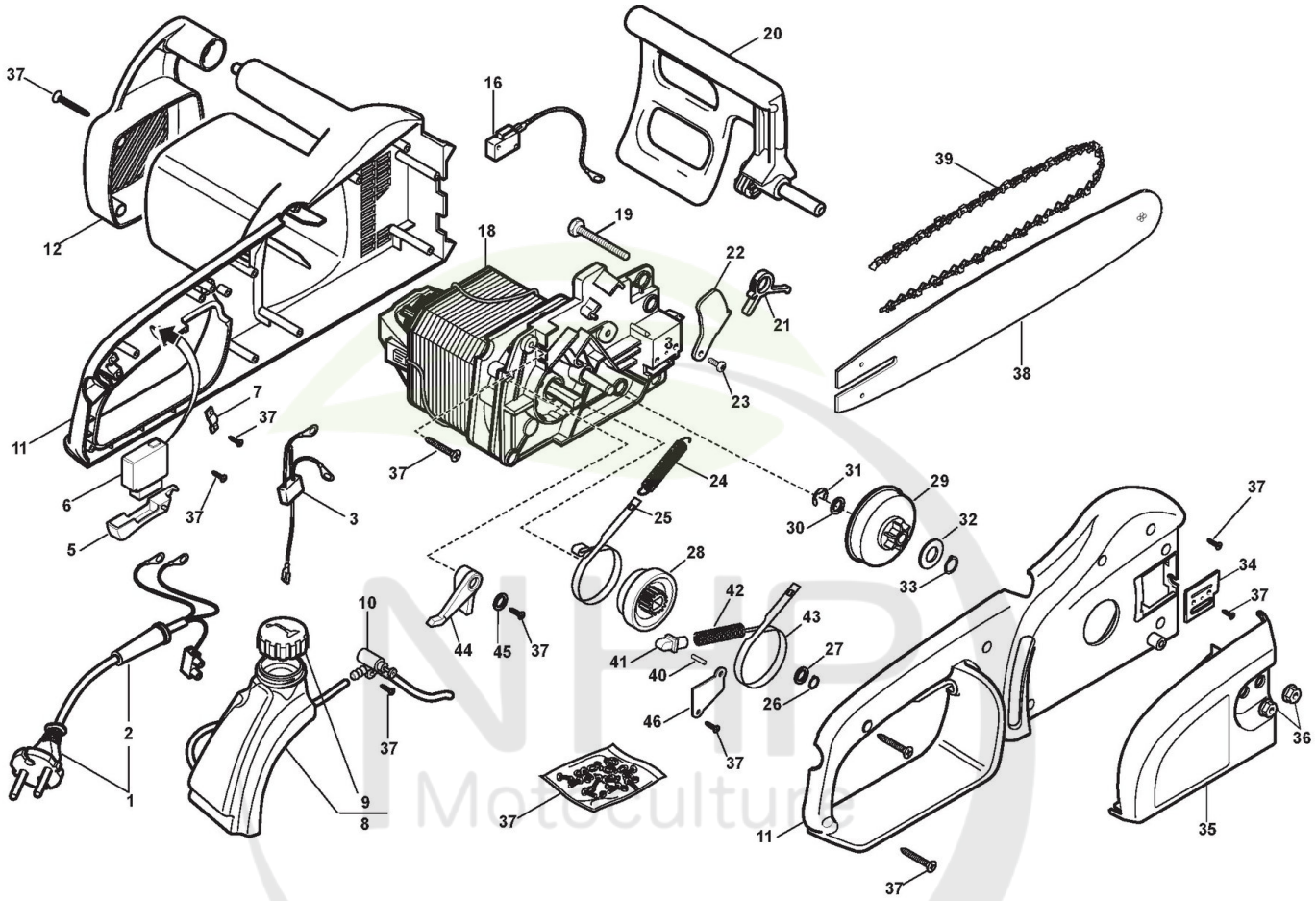



Copyright ST. S.P.A.

# Tronçonneuse électrique

| Réf. N° | Q.té : | Code article | Description | Articles | De | Jusqu'à |
|---|---|---|---|---|---|---|
| 1 | 1 | 6980500 | Ens. Câble Alim. | | | |
| 2 | 1 | 6980501 | Passe-Câble Alim. | | | |
| 3 | 1 | 6980539 | Condensateur | | | |
| 5 | 1 | 6980502 | Levier Commande Interrup. | | | |
| 6 | 1 | 6980503 | Interrupteur | | | |
| 7 | 1 | 6980504 | Etrier | | | |
| 8 | 1 | 6980505 | Réservoir Huile | | | |
| 9 | 1 | 6980506 | Bouchon Huile | | | |
| 10 | 1 | 6980507 | Pompe À Huile | | | |
| 11 | 1 | 6980508 | Ens. Poignée Jaune | | | |
| 11 | 1 | 6980509 | Ens. Poignée Rouge | | | |
| 12 | 1 | 6980510 | Protecteur Moteur Gris | | | |
| 16 | 1 | 6980514 | Interrupteur | | | |
| 18 | 1 | 6980516 | Moteur | | | |
| 19 | 2 | 6980517 | Vis | | | |
| 20 | 1 | 6980518 | Ens. Protège-Main | | | |
| 21 | 1 | 6980519 | Levier | | | |
| 22 | 1 | 6980520 | Levier Bande Frein | | | |
| 23 | 1 | 6980521 | Vis | | | |
| 24 | 1 | 6980522 | Ressort Frein | | | |
| 25 | 1 | 6980523 | Bande Frein | | | |
| 26 | 1 | 6980524 | Circlips | | | |
| 27 | 1 | 6980525 | Rondelle | | | |
| 28 | 1 | 6980526 | Disque Frein | | | |
| 29 | 1 | 6980527 | Ens. Roue Dentée | | | |
| 30 | 1 | 6980528 | Rondelle | | | |
| 31 | 1 | 6980529 | Circlips | | | |
| 32 | 1 | 6980530 | Rondelle | | | |
| 33 | 1 | 6980511 | Circlips | | | |
| 34 | 1 | 6980531 | Tendeur Chaîne | | | |
| 35 | 1 | 6980532 | Ens. Carter Chaîne Gris | | | |
| 36 | 2 | 6980533 | Ecrou | | | |
| 37 | 1 | 6980534 | Dotation Visserie | | | |
| 38 | 1 | 6980536 | Guide-Chaîne 14inch | | | |
| 39 | 1 | 4113701 | Chaîne 14inch | | | |
| 40 | 1 | 6980540 | Pivot | | | |
| 41 | 1 | 6980541 | Commande Bande Frein | | | |
| 42 | 1 | 6980542 | Ressort Frein | | | |
| 43 | 1 | 6980543 | Bande Frein | | | |
| 44 | 1 | 6980544 | Levier | | | |
| 45 | 1 | 6980545 | Rondelle | | | |
| 46 | 1 | 6980546 | Plaquette | | | |


Copyright ST. S.P.A.